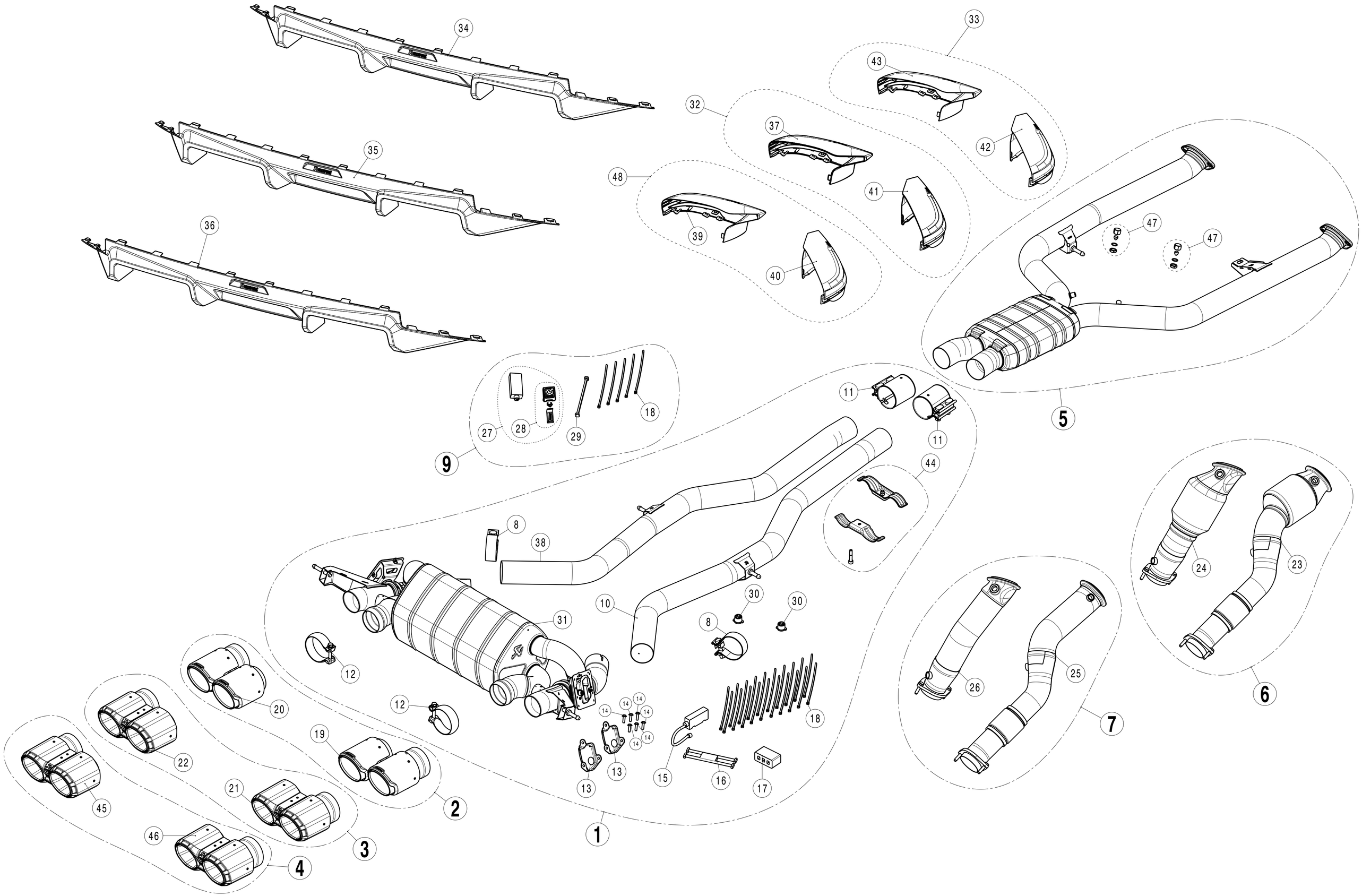

34
35
36
33
43
32
37
42
48
41
39
40
47
47
5
11
11
18
27
28
29
9
44
8
38
10
30
30
8
31
12
12
20
19
22
21
45
46
4
3
2
1
13
13
14
14
14
14
14
15
16
17
18
24
23
26
25
7
6

No.	SalesCode	Description	Qty.
1	S-BM/T/34H	slip on system	1
2	TP-CT/68	tail pipe CA Set	1
3	TP-CT/69	tail pipe CA Set	1
4	TP-CT/73/CF	tail pipe set CCF	1
5	E-BM/SS/9	evolution link pipe set	1
6	DP-BM/SS/8	downpipe SS optional cat	1
7	DP-BM/SS/9	downpipe SS optional w/o cat	1
8	P-R69	clamp SS	2
9	P-HF1384	Sound Kit	1
10	L-BM/T/14/R	Linkpipe TI right	1
11	P-R75	clamp SS	2
12	P-R142	clamp SS	2
13	P-HS/BM/1	heat shield SS	2
14	P-FB220	bolt	6
15	P-HF936	VTS CAN Sniffer	1
16	P-HF1404	cable/wire harness	1
17	P-HF1382	Controller EU6	1
18	P-VEZ2	tie wrap	20
19	TP-CT/68/R	tail pipe right CA	1
20	TP-CT/68/L	tail pipe left CA	1
21	TP-CT/69/R	tail pipe right CA	1
22	TP-CT/69/L	tail pipe left CA	1
23	DP-BM/SS/8/R	downpipe SS right	1
24	DP-BM/SS/8/L	downpipe SS left	1
25	DP-BM/SS/9/R	downpipe SS right	1
26	DP-BM/SS/9/L	downpipe SS left	1
27	P-HF841-A5	Key Fob + Receiver	1
28	P-HF841/2	Key Fob	1
29	P-HF1109	cable/wire harness	1
30	P-HF1453	lever SS	2
31	M-BM/T/27H	muffler	1
32	WM-BM/CA/4/M	CA Wing Mirror Cover Set Matte	1
33	WM-BM/CA/5/CF	CCF Wing Mirror Cover Set Matte	1

34	DI-BM/CA/10/G	rear CA diffuser Glossy	1
35	DI-BM/CA/10/M	rear CA diffuser Matt	1
36	DI-BM/CA/10/CF	rear CCF diffuser Matt	1
37	WM-BM/CA/4/M/L	Wing Mirror Cover CA Matte Left	1
38	L-BM/T/14/L	Linkpipe TI left	1
39	WM-BM/CA/4/G/L	Wing Mirror Cover CA High Gloss Left	1
40	WM-BM/CA/4/G/R	Wing Mirror Cover CA High Gloss Right	1
41	WM-BM/CA/4/M/R	Wing Mirror Cover CA Matte Right	1
42	WM-BM/CA/5/CF/R	Wing Mirror Cover CaCF Matte Right	1
43	WM-BM/CA/5/CF/L	Wing Mirror Cover CaCF Matte Left	1
44	P-X328	bracket	1
45	TP-CT/73/CF/L	tail pipe left CaCF	1
46	TP-CT/73/CF/R	tail pipe right CaCF	1
47	P-HF1407	pressure plug with gasket for LP	2
48	WM-BM/CA/4/G	CA Wing Mirror Cover Set High Gloss	1